New version 2014

Fox

Rotary limit switch

Fox is a device used to control the movement of industrial machinery when in need of measuring the movement on the basis of the rotation angle and/or of the number of shaft revolutions. Fox is made up by a gearmotor which transfers the movement to the cams and to the other movement detection devices placed inside it through a primary input reduction step (worm gear and helical toothed gear) and one or more secondary output steps (pairs of straight toothed gears).

Fox is used on wind turbines to control the position of the nacelle or the pitch angle of the blades. The motor that controls the rotation of a wind turbine on the yaw axis (or of the blade around its longitudinal axis) transfers the movement to the limit switch. A rotary encoder reads the rotation of the shaft, and its pulses are sent to a PLC which controls the position of the nacelle or of the blade. The movement of the shaft is also transferred, through a gearmotor, to a series of cam switches: the appropriate setting of the actuating point of the cams can signal up to four critical positions of the movement of the nacelle or of the blade.

Features

Revolution ratios, ranging from 1:3 to 1:2870, result from the combination of different secondary output steps. Each cam can be set with great accuracy thanks to the cam adjusting screws. The auxiliary switches are of a positive opening type, thus suitable for safety functions.

Options

Fox can be fitted with different combinations of actuators and motion detectors: sets of cams and microswitches (max. 5), potentiometers or encoders (max. 1), absolute encoder Yankee 1 for set of cams and microswitches (max. 1).
It is possible to fit together sets of cams and microswitches, potentiometers, encoder and Yankee 1, thus creating a device featuring redundancy and diversity.
The limit switch is available with a flange for direct coupling to the motor. Different labels and colors are also available.

Materials

Fox features transmission and gear driving shafts made of stainless steel AISI 430F or AISI 303, worm gear transmission shaft rotating on ball bearings, self-lubricating techno-polymer gears and driving bushes, techno-polymer base and cover. All techno-polymers used for the enclosure are wear resistant and protect the equipment against water and dust.

Industrial lifting

Construction lifting

Industrial automation

Stage technology

Wind energy

Standards - Markings - homologations

- Conformity to Community Directives:
  2006/95/CE: Low Voltage Directive
  2006/42/CE: Machinery Directive
- Conformity to Standards:
  EN 60204-1 Safety of machinery - Electrical equipment of machines
  EN 60204-32 Safety of machinery - Electrical equipment of machines - Requirements for hoisting machines
  EN 60947-1 Low-voltage switchgear and controlgear
  EN 60947-5-1 Low-voltage switchgear and controlgear - Control circuit devices and switching elements - Electromechanical control circuit devices
  EN 60529 Degrees of protection provided by enclosures
- Regulations for the prevention of accidents BGV C 1 (only for Germany)
- Markings and homologations: CE

General technical specifications

- Storage ambient temperature: -40°C/+80°C
- Operational ambient temperature: -40°C/+80°C
- Protection degree:
  IP 66 / IP 67 / IP 69K
- Insulation category: Class II
- Cable entry: cable clamp M20, M20+M16, M20+M20
- Rotation speed:
  revolution ratios ≥1:16: max. 800 rev./min.
  revolution ratios <1:16: max. 200 rev./min.
- HALT test (data available on request)
- Markings and homologations: CE cULus EAC SIL 1

Technical specifications of the microswitches

- Utilisation category:
  AC 15 / 250 V / 3 A max.
  DC 13 / 60 V / 0.5 A max.
- Rated thermal current: 10 A max.
- Rated insulation voltage: 300 Vac
- Mechanical life: 1.5×10^6 operations max.
- Terminal referencing: according to EN 50013
- Connections: screw-type terminals
- Markings and homologations:
  PRSL0100XX: CE VDE CCC cULus (general purpose)
  PRSL0110XX-PRSL0111XX: CE UL CSA

- The snap action switch PRSL0100XX has 1 NO + 1 NC change over contacts.
- The snap action switch PRSL0110XX has 1 NO + 1 NC change over contacts, double break.
- The slow action switch PRSL0111XX has 1 NC contact, double break.

All NC contacts are of the positive opening operation type ⊖.
The switches have the following reference for internal wiring.

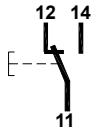

PRSL0100XX

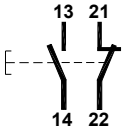

PRSL0110XX

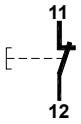

PRSL0111XX

Overall dimensions (mm)

Standard

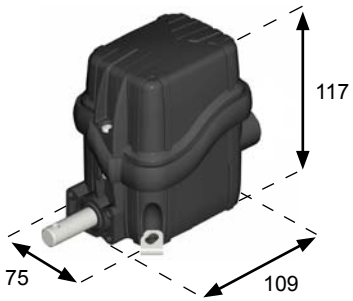

With flange

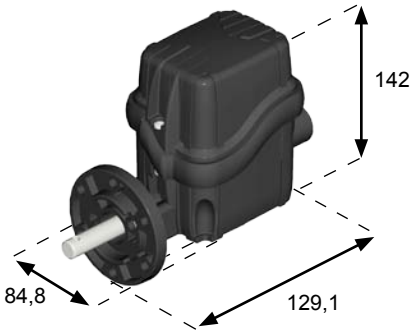

Possible assemblies

With set of cams,
Yankee 1 absolute encoder

Yankee 1
absolute encoder